SFP-25G-LR-S-PRO

Cisco® SFP-25G-LR-S Compatible TAA Compliant 25GBase-LR SFP28 Transceiver (SMF, 1310nm, 10km, DOM, 0 to 70C, LC)

Features

- SFF-8402 and SFF-8472 Compliance
- Duplex LC Connector
- Commercial Temperature 0 to 70 Celsius
- Single-mode Fiber
- Hot Pluggable
- Excellent ESD Protection
- Metal with Lower EMI
- RoHS Compliant and Lead Free

Applications:

- 25GBase Ethernet
- Access and Enterprise

Product Description

This Cisco® SFP-25G-LR-S compatible SFP28 transceiver provides 25GBase-LR throughput up to 10km over single-mode fiber (SMF) using a wavelength of 1310nm via an LC connector. It is guaranteed to be 100% compatible with the equivalent Cisco® transceiver. This easy to install, hot swappable transceiver has been programmed, uniquely serialized and data-traffic and application tested to ensure that it will initialize and perform identically. Digital optical monitoring (DOM) support is also present to allow access to real-time operating parameters. This transceiver is Trade Agreements Act (TAA) compliant. We stand behind the quality of our products and proudly offer a limited lifetime warranty.

Proline's transceivers are RoHS compliant and lead-free.

TAA refers to the Trade Agreements Act (19 U.S.C. & 2501-2581), which is intended to foster fair and open international trade. TAA requires that the U.S. Government may acquire only "U.S. – made or designated country end products.

Rev. 100223

Absolute Maximum Ratings

Parameter	Symbol	Min.	Typ.	Max.	Unit	Notes
Supply Voltage	Vcc	-0.5		4.0	V	
Storage Temperature	TS	-40		85	°C	
Operating Case Temperature	Tc	0	25	70	°C	
Relative Humidity	RH	5		95	%	
Data Rate	BR		25.78		Gb/s	
Bit Error Rate	BER			$5x10^{-5}$		1
Supported Link Length on 9/125um SMF, 25.78GB/s	L		10		km	2

Notes:

1. Tested with a PRBS 231-1 test pattern for 25.78Gb/s operation.
2. Distances are based on FC-PI-6 Rev 3.1 and IEEE 802.3 standards.

Electrical Characteristics

Parameter		Symbol	Min	Typ	Max	Unit	Notes
Supply Voltage		Vcc	3.135	3.3	3.465	V	
Data Rate				25.78		GB/s	
Module Supply Current		Icc			450	mA	
Power Dissipation		P_D			1500	mW	
Transmitter							
Input Differential Impedance		Z_{IN}		100		Ω	
Differential Data Input Swing		$V_{IN, P-P}$	180		700	mV_{P-P}	
TX_FAULT	**Transmitter Fault**	V_{OH}	2.0		V_{CCHOST}	V	
	Normal Operation	V_{OL}	0		0.8	V	
TX_DISABLE	**Transmitter Disable**	V_{IH}	2.0		V_{CCHOST}	V	
	Transmitter Enable	V_{IL}	0		0.8	V	
Receiver							
Output Differential Impedance		Z_O		100		Ω	
Differential Data Output Swing		$V_{OUT, P-P}$	300		850	mV_{P-P}	1
Data Output Rinse Time, Fall Time		tr, tf	15			Ps	2
Rx_LOS	**Loss of Signal (LOS)**	V_{OH}	2.0		V_{CCHOST}	V	3
	Normal Operation	V_{OL}	0		0.8	V	3

Notes:

1. Internally AC coupled, but requires an external 100Ω differential load termination.
2. 20-80%
3. LOS is an open collector output. Should be pulled up with 4.7Ω on the host board.

Optical Characteristics

Parameter	Symbol	Min	Typ	Max	Unit	Notes
Transmitter						
Launch Optical Power	Po	-5		2	dBm	1
Extinction Ratio	ER	4			dB	
Center Wavelength Range	λc	1295	1310	1325	nm	
Optical Modulation Amplitude	OMA	631			uW	
Transmitter Dispersion Penalty	TDP			2.7	dB	
Spectral Width	Δλ			1	nm	2
Optical Rise/Fall Time @25.78 Gb/s	tr/tf			15	ps	3
Optical Return Loss Tolerance	ORLT			12	dB	
Pout @TX-Disable Asserted	POFF			-30	dBm	1
Receiver						
Center Wavelength	λc	1260	1310	1370	nm	
Receiver OMA Sensitivity	RxSENS			-11.4	dBm	4
Receiver Overload (P avg)	POL	2			dBm	
Optical Return Loss	ORL	26			dB	
LOS De-Assert	LOSD			-13	dBm	
LOS Assert	LOSA	-30			dBm	
LOS Hysteresis		0.5			dB	

Notes:

1. Class 1 Laser Safety per FDA/CDRH and EN (IEC) 60825 regulations.
2. 20dB spectral width.
3. Unfiltered, 20-80%.
4. Measured with PRBS 2^{31}-1 at 5×10^{-5} BER

Pin Descriptions

Pin	Symbol	Name/Descriptions	Notes
1	VeeT	Transmitter Ground	1
2	TX_Fault	Transmitter Fault (LVTTL-O) - High indicates a fault condition	2
3	TX_Disable	Transmitter Disable (LVTTL-I) – High or open disables the transmitter	3
4	SDA	Two wire serial interface Data Line (LVCMOS-I/O) (MOD-DEF2)	4
5	SCL	Two wire serial interface Clock Line (LVCMOS-I/O) (MOD-DEF1)	4
6	MOD_ABS	Module Absent (Output), connected to VeeT or VeeR in the module	5
7	RSO		6
8	RX_LOS	Receiver Loss of Signal (LVTTL-O)	2
9	RS1		6
10	VeeR	Receiver Ground	1
11	VeeR	Receiver Ground	1
12	RD-	Inverse Received Data out (CML-O)	
13	RD+	Received Data out (CML-O)	
14	VeeR	Receiver Ground	
15	VccR	Receiver Power - +3.3V	
16	VccT	Transmitter Power - +3.3 V	
17	VeeT	Transmitter Ground	1
18	TD+	Transmitter Data In (CML-I)	
19	TD-	Inverse Transmitter Data In (CML-I)	
20	VeeT	Transmitter Ground	1

Notes:

1. The module signal grounds are isolated from the module case.
2. This is an open collector/drain output that on the host board requires a 4.7KΩ to 10KΩ pull-up resistor to VccHost.
3. This input is internally biased high with a 4.7KΩ to 10KΩ pull-up resistor to VccT.
4. Two-Wire Serial interface clock and data lines require an external pull-up resistor dependent on the capacitance load.
5. This is a ground return that on the host board requires a 4.7KΩ to 10KΩ pull-up resistor to VccHost.
6. Rate select can also be set through the 2-wire bus in accordance with SFF-8472 v. 12.1, Rx Rate Select is set at Bit 3, Byte 110, Address A2h. Tx Rate Select is set at Bit 3, Byte 118, Address A2h. Note: writing a “1” selects maximum bandwidth operation. Rate select is the logic OR of the input state of Rate Select Pin and 2-wire bus.

Electrical Pin-Out Details

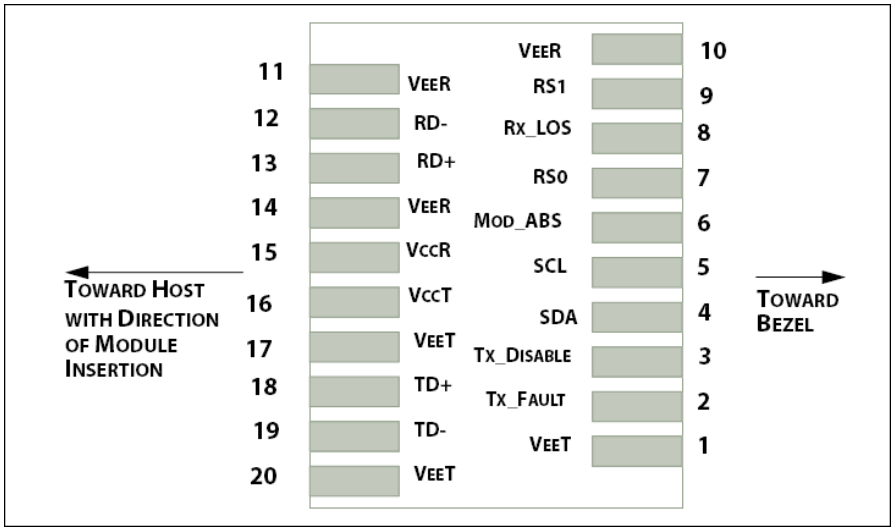

Recommended Host Board Power Supply Filter Network

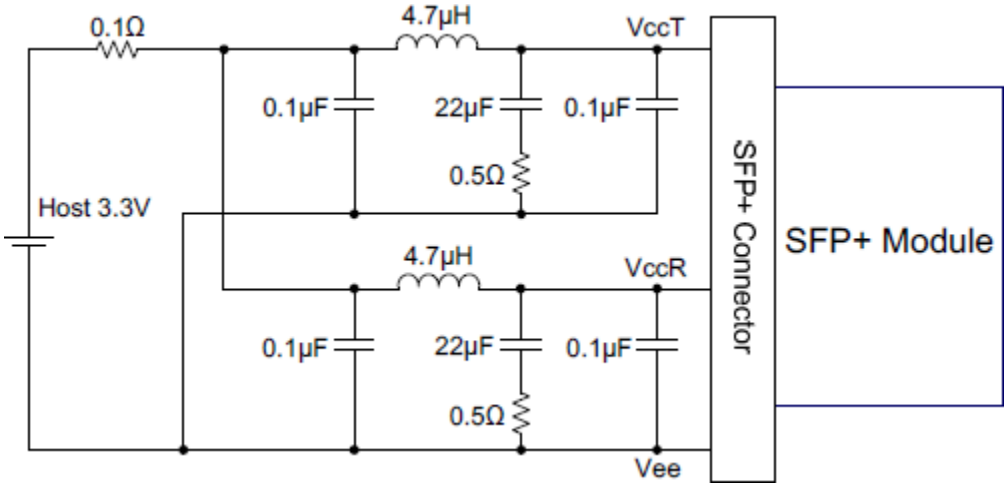

Recommended Application Interface Block Diagram

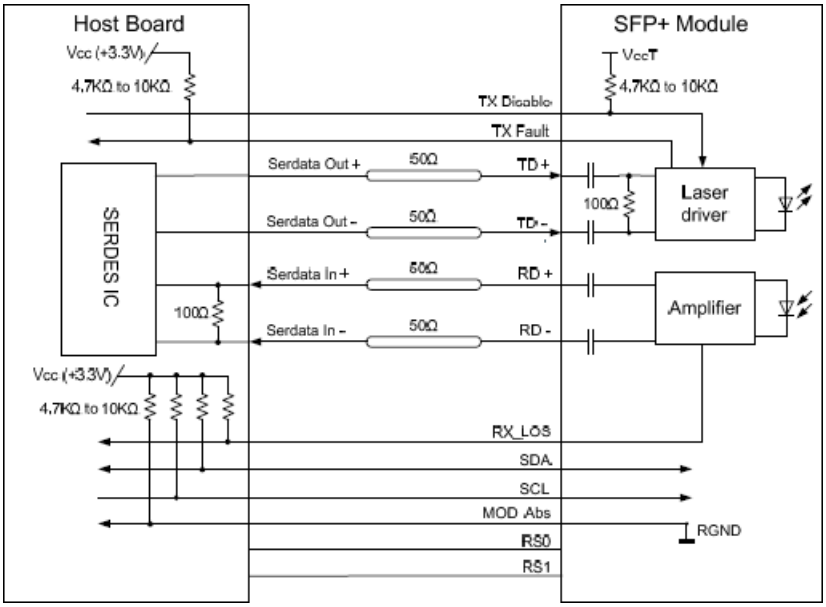

Mechanical Specifications

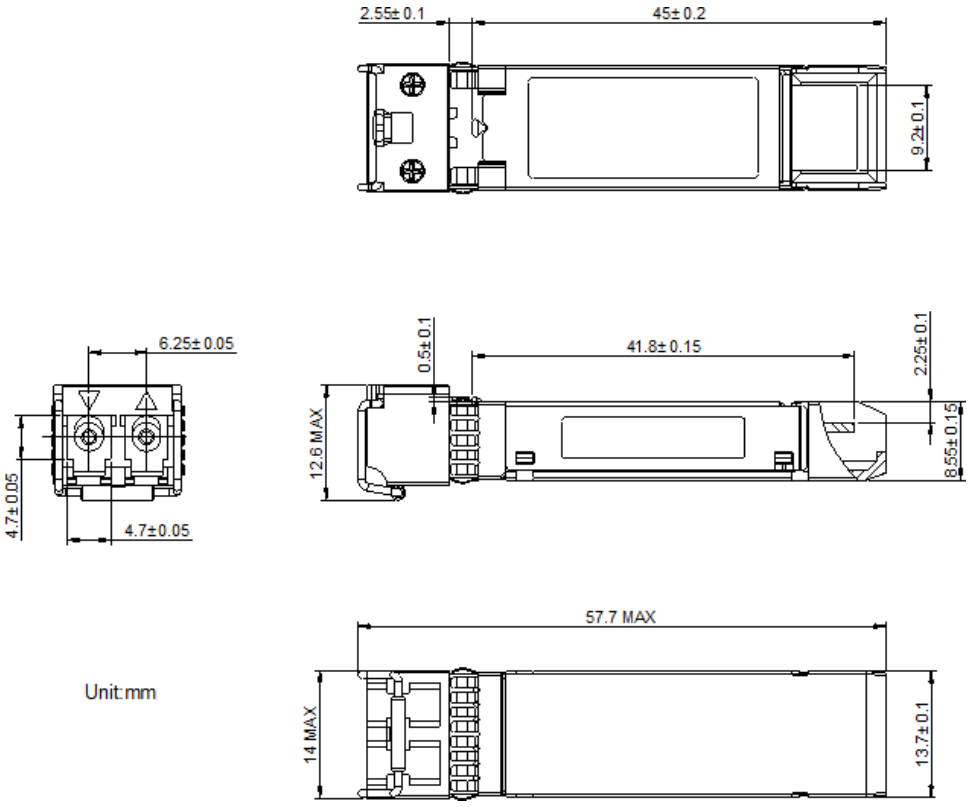

About Us:

Proline Options is one of North America's leading providers of transceivers and high speed cabling. With a reputation for quality, tested products that cover the connectivity spectrum, Proline Options has a solution for you regardless of the specification.

At Proline Options, every product is tested in its intended application - never batch or spec tested only. We run bandwidth, distance and IOS network tests. We have documented an impressive 0.03% failure rate over the last 10 years. To continue this rate of success we invest millions annually in our own on-site testing lab.

Tel: 855.933.3223
Email: sales@prolineoptions.com
Email: techsupport@prolineoptions.com
Web: https://www.prolineoptions.com