SFP-25GB-CW-31-40-AR-AO

Arista Networks® Compatlble TAA 25Gbase-CWDM SFP28 Transceiver (SMF, 1310nm, 40km, LC, DOM)

Features

- Up to 25.78Gbps Data Links
- CWDM DFB Laser and APD receiver
- Up to 40km transmission on SMF
- Hot-pluggable SFP28 footprint
- Specifications compliant with SFF 8472
- Metal enclosure, for lower EMI
- Compliant with SFF-8402 with LC connector
- Dual CDR with bypass function
- Power dissipation: 2.0W
- Single 3.3V power supply
- Operating Temperature: 0 to 70 Celsius
- RoHS Compliant and Lead-Free

Applications

- 25x Gigabit Ethernet over CWDM
- Access, Metro and Enterprise
- Mobile Fronthaul CPRI/OBSAI

Product Description

This Arista Networks® SFP28 transceiver provides 25GBase-CWDM throughput up to 40km over single-mode fiber (SMF) using a wavelength of 1310nm via an LC connector. It is guaranteed to be 100% compatible with the equivalent Arista Networks® transceiver. This easy to install, hot swappable transceiver has been programmed, uniquely serialized and data-traffic and application tested to ensure that it will initialize and perform identically. Digital optical monitoring (DOM) support is also present to allow access to real-time operating parameters. We stand behind the quality of our products and proudly offer a limited lifetime warranty.

AddOn's transceivers are RoHS compliant and lead-free.

TAA refers to the Trade Agreements Act (19 U.S.C. & 2501-2581), which is intended to foster fair and open international trade. TAA requires that the U.S. Government may acquire only "U.S. – made or designated country end products."

Rev. 101524

CWDM Available Wavelengths

Wavelengths	Min.	Typ.	Max.
27	1264.5	1271	1277.5
29	1284.5	1291	1297.5
31	1304.5	1311	1317.5

Absolute Maximum Ratings

Parameter	Symbol	Min.	Typ.	Max.	Unit	Notes
Maximum Supply Voltage	Vcc	-0.3		4	V	
Storage Temperature	TS	-40		85	°C	
Operating Case Temperature	Tc	0		70	°C	
Relative Humidity (non-condensing)	RH	0		85	%	
Data Rate	BR		25.78		Gbps	1
Transmission Distance	TD		40		km	
Coupled fiber	Single mode fiber					2

Notes:

1. TX Rate/RX Rate
2. 9/125um SMF

Electrical Characteristics

Parameter	Symbol	Min.	Typ.	Max.	Unit	Notes
Power Supply Voltage	Vcc	3.14	3.3	3.47	V	
Power Supply Current	Icc			550	mA	
	Icc			600	mA	
Signal Input Voltage	V_{SI}	Vcc-0.3		Vcc+0.3	V	
Transmitter						
Input differential impedance	Rin		100		Ω	1
Single ended data input swing	Vin,pp	180		700	mV	
Transmitter Fault Output-High	V_{FaultH}	2		Vcc+0.3	V	
Transmitter Fault Output-Low	V_{FaultL}	0		0.8	V	
Transmitter Disable Voltage- High	V_{DisH}	2		Vcc+0.3	V	
Transmitter Disable Voltage- low	V_{DisL}	0		0.8	V	
Receiver						
Differential data output swing	Vout,pp	300		850	mV	2
LOS Output Voltage-High	V_{LOSH}	2		Vcc+0.3	V	
LOS Output Voltage-Low	V_{LOSL}	0		0.8	V	

Notes:

1. Connected directly to TX data input pins. AC coupled thereafter.
2. Into 100 ohms differential termination.

Optical Characteristics

Parameter	Symbol	Min.	Typ.	Max.	Unit	Notes
Transmitter						
Average Launched Power	P_O	0		+6.0	dBm	
Center Wavelength Range	λC	λ-6.5		λ+6.5	nm	1
Spectrum Bandwidth (-20dB)	Δλ			1	nm	
Side-Mode Suppression Ratio	SMSR	30			dB	
Extinction Ratio	ER	3.5			dB	2
Relative Intensity Noise	$RIN_{20}OMA$			-130	dB/Hz	
Average Launched Power (Laser Off)	P_{off}			-30		
Optical return loss tolerance				20	dB	
Transmitter reflectance				-12	dB	
Transmitter eye mask definition {X1, X2, X3, Y1, Y2, Y3} Hit ratio 5x10 -5 hits per sample		{0.31, 0.4, 0.45, 0.34, 0.38, 0.4}				3
Receiver						
Input Optical Wavelength	λ_{IN}	1270		1610	nm	
Damage threshold		-3			dBm	
Receiver Sensitivity	P_{sen1}			-19	dBm	4
Input Saturation Power (Overload)	PSAT	-6			dBm	4
Los Of Signal Assert	P_A	-35			dBm	
Los Of Signal De-assert	P_D			-20	dBm	
LOS -Hysteresis	P_{Hys}	0.5		6	dB	

Notes:

1. λis: 1271~1311 (nm)
2. Measured with a PRBS 231-1 test pattern, @25.78Gb/s.
3. Transmitter eye mask definition, Compliant with IEEE 802.3cc.
4. Measured with Light source 1310nm, ER=3.5dB; BER =<5X10-5 @PRBS=231-1 NRZ.

Pin Descriptions

Pin	Symbol	Name/Descriptions	Ref.
1	VeeT	Transmitter Ground (Common with Receiver Ground).	1
2	TX Fault	Transmitter Fault. LVTTL-O	2
3	TX Disable	Transmitter Disable. Laser output disabled on high or open. LVTT-I.	3
4	SDA	2-Wire Serial Interface Data Line (Same as MOD-DEF2 in INF-8074i). LVTTL-I/O.	
5	SCL	2-Wire Serial Interface Data Line (Same as MOD-DEF2 in INF-8074i). LVTTL-I.	
6	MOD_ABS	Module Absent, Connect to VeeT or VeeR in Module.	4
7	RS0	Rate Select 0. Not used	5
8	LOS	Loss of Signal indication. Logic 0 indicates normal operation. LVTTL-O.	2
9	RS1	Rate Select 1. Not used	5
10	VeeR	Receiver Ground (Common with Transmitter Ground).	1
11	VeeR	Receiver Ground (Common with Transmitter Ground).	1
12	RD-	Receiver Inverted DATA out. AC Coupled. CML-O.	
13	RD+	Receiver Non-inverted DATA out. AC Coupled. CML-O.	
14	VeeR	Receiver Ground (Common with Transmitter Ground).	1
15	VccR	Receiver Power Supply.	
16	VccT	Transmitter Power Supply.	
17	VeeT	Transmitter Ground (Common with Receiver Ground).	1
18	TD+	Transmitter Non-Inverted DATA in. AC Coupled. CML-I.	
19	TD-	Transmitter Inverted DATA in. AC Coupled. CML-O.	
20	VeeT	Transmitter Ground (Common with Receiver Ground).	1

Notes:

1. The module signal ground contacts, VeeR and VeeT, should be isolated from the module case.
2. This contact is an open collector/drain output and should be pulled up to the Vcc_Host with resister in the range 4.7KΩ to 10KΩ. Pull ups can be connected to one or several power supplies, however the host board design shall ensure that no module contract has voltage exceeding module VccT/R +0.5.V.
3. Tx_Disable is an input contact with a 4.7KΩ to 10KΩ pull-up resistor to VccT inside module.
4. Mod_ABS is connected to VeeT or VeeR in the SFP+ module. The host may pull the contract up to Vcc_Host with a resistor in the range from 4.7KΩ to 10KΩ. Mod_ABS is asserted “High” when the SFP+ module is physically absent from a host slot.
5. Internally pulled down per SFF-8431

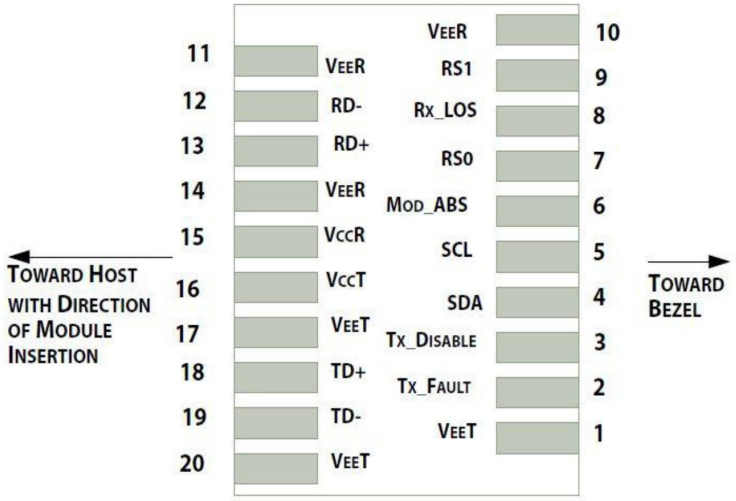

Pin-out of connector Block on Host board

Recommended Interface Circuit Schematic

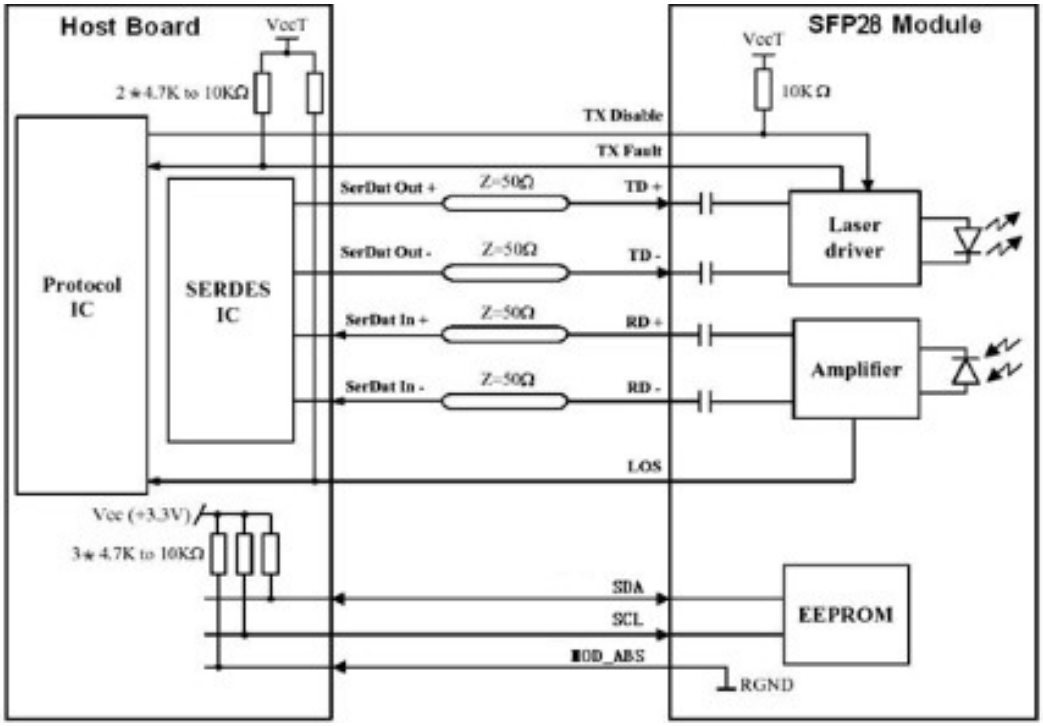

Mechanical Specifications

Small Form Factor Pluggable (SFP) transceivers are compatible with the dimensions defined by the SFP Multi-Sourcing Agreement (MSA).

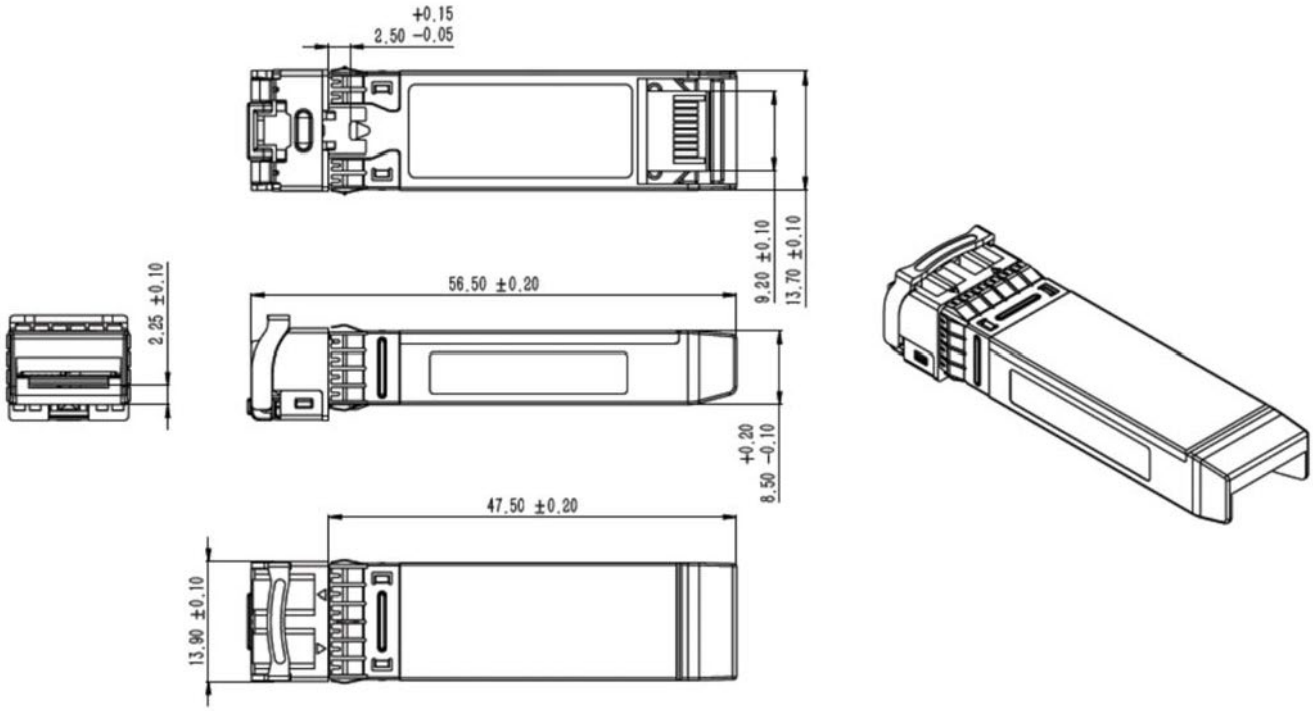

About AddOn Networks

In 1999, AddOn Networks entered the market with a single product. Our founders fulfilled a severe shortage for compatible, cost-effective optical transceivers that compete at the same performance levels as leading OEM manufacturers. Adhering to the idea of redefining service and product quality not previously had in the fiber optic networking industry, AddOn invested resources in solution design, production, fulfillment, and global support.

Combining one of the most extensive and stringent testing processes in the industry, an exceptional free tech support center, and a consistent roll-out of innovative technologies, AddOn has continually set industry standards of quality and reliability throughout its history.

Reliability is the cornerstone of any optical fiber network and is in engrained in AddOn's DNA. It has played a key role in nurturing the long-term relationships developed over the years with customers. AddOn remains committed to exceeding industry standards with certifications from ranging from NEBS Level 3 to ISO 9001:2005 with every new development while maintaining the signature reliability of its products.

U.S. Headquarters

Email: sales@addonnetworks.com

Telephone: +1 877.292.1701

Fax: 949.266.9273

Europe Headquarters

Email: salessupportemea@addonnetworks.com

Telephone: +44 1285 842070